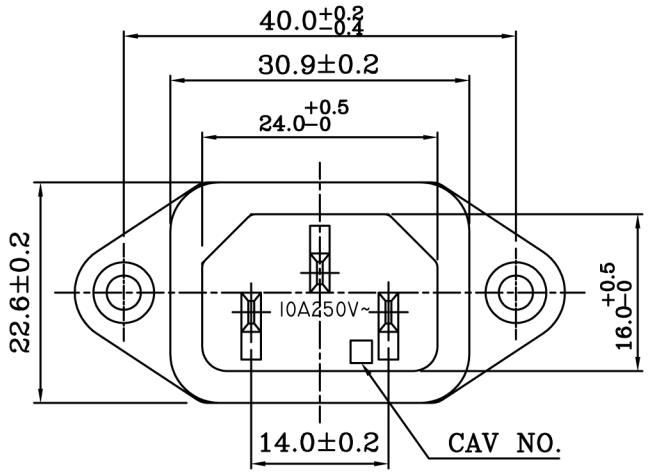

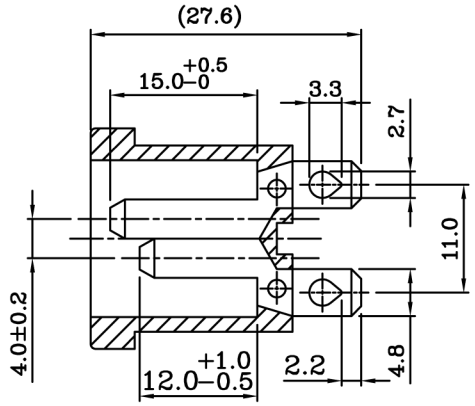

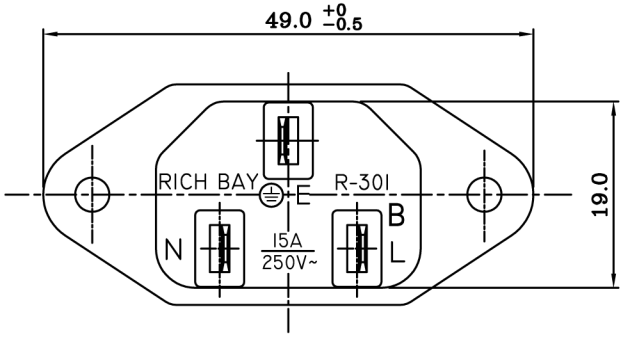

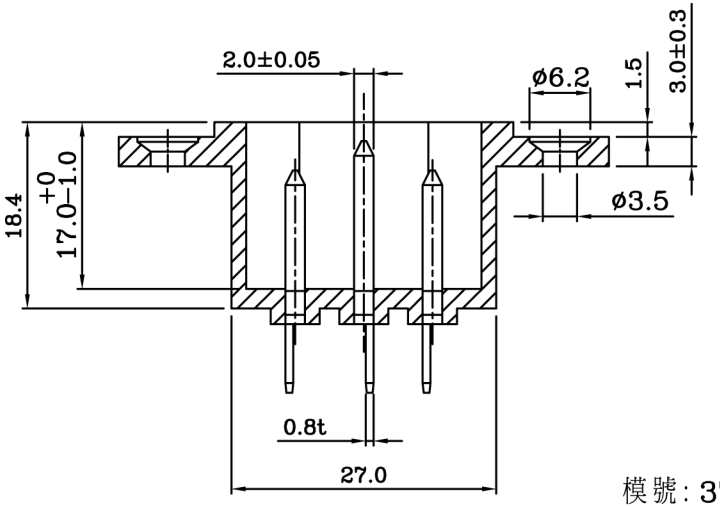

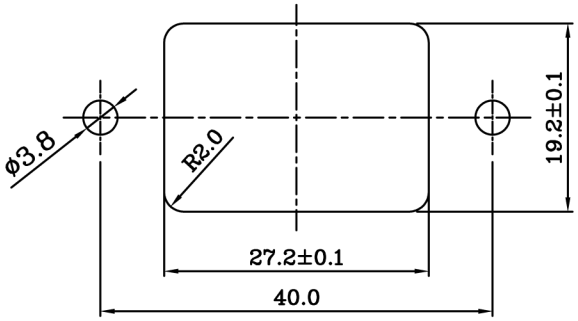

PANEL CUT−OUT

SPECIFICATION:

1. INSULATION RESISTANCE: OVER 100MΩ 500V DC.
2. DIELECTRIC STRENGTH: 2000V AC ONE MINUTE.
3. Body Materil: Black Glass−Fiber Thermoplastic . UL 94V−2~0

Rating:AC 15A 250V	
Mark	Safety Regulation
ᖵ	UL
cᖵ	CUL
Rating:AC 10A 250V	
Mark	Safety Regulation
	VDE
	CCC
	ENEC

模號: 37,38,39,40,41,42,43,44
61,62,63,64,65,66,67,68.
69,70,71,72,73,74,75,76.

IMPORTANT THIS DRAWING FOR REFERENCE ONLY 注意 : 此圖只供參考用

	UNIT	UNIT Q'TY	SCALE	TOLERANCE	X.XX±0.1 XX.XX±0.2 XXX.XX±0.3	PRODUCT NO.	CB-I-C14	REV
	mm	1	1:1					
DRAWN BY 李 2010.3.25 小英		APPROVED BY 羅 2010.3.25 士凱		ID NO	10032501Q	INTERIM NO.		B
				DESCRIPTION		NEW NO.		